HS-150S Premium Accelerometer

AC acceleration output via PUR Cable

Key Features

- Waterproof
- Resistant to oil
- Premium design

Industries

Building services, Pulp and Paper, Mining, Metals, Utilities, Automotive, Water, Pharmaceutical

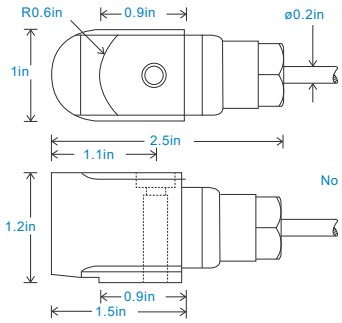

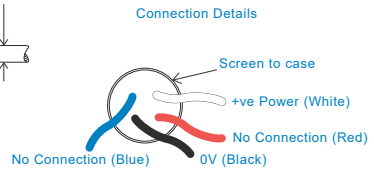

Technical Performance

Mounted Base Resonance	see 'How To Order' table (nominal)
Sensitivity	see: 'How To Order' table ±10%
	Nominal 80Hz at 72°F
Frequency Response	120cpm (2Hz) to 600kcpm (10kHz) ± 5%
	90cpm (1.5Hz) to 720kcpm (12kHz) ± 10%
	48cpm (0.8Hz) to 900kcpm (15kHz) ± 3dB
Isolation	Base isolated
Range	see: 'How To Order' table
Transverse Sensitivity	Less than 5%

Mechanical

Case Material	316L Stainless Steel
Sensing Element/Construction	PZT/Shear
Mounting Torque	5.9ft. lbs
Mounting Bolt provided	see: 'How To Order' table x 1.4in long
Weight	7.2 oz. (nominal) body only
Maximum Cable Length	3,280 ft.
Standard Cable Length	16 ft.
Shielded Cable	PUR - length to be specified with order
Mounting Threads	see: 'How To Order' table
Submersible Depth	328 ft. max (10 bar)

Electrical

Excitation Voltage	18-30Volts DC
Electrical Noise	0.1mg max
Current Range	0.5mA to 8mA
Bias Voltage	10 - 12 Volts DC
Settling Time	2 seconds
Output Impedance	200 Ohms max.
Case Isolation	$>10^8$ Ohms at 500 Volts

Environmental

Operating Temperature Range	-22 to 194°F
Sealing	IP68
Maximum Shock	5000g
EMC	EN61326-1:2013

Typical Frequency Response (at 100mV/g)

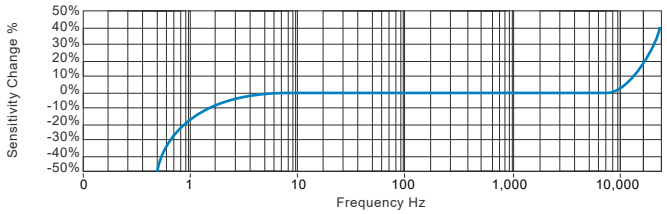

Applications

Fans, Motors, Pumps, Compressors, Centrifuges, Conveyors, Air Handlers, Gearboxes, Rolls, Dryers, Presses, Cooling, VAC, Spindles, Machine Tooling, Process Equipment

Vibration sensor should be firmly fixed to a flat surface (spot face surface may be needed to be produced and cable anchored to sensor body.)

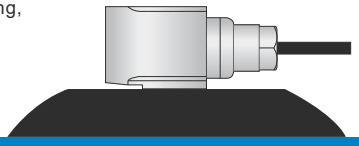

How To Order

Product Prefix
HS - Hansford Sensors

Product Series
150 - Premium Industrial Vibration Sensor

Cable Length (if integral cable)
UXX - length specified in feet

H	S	1	5	0	S	X	X	X	X	X	X	X	X	X	X

Extra Options (if required)
F - Filtered
RT - Temperature Output PT100
S - 90° Side Exit
T - Temperature Output
Y - 5% tolerance on sensitivity

Sensitivity	Range	Resonant Frequency
010 - 10mV/g	±800g	2,040kcpm (34kHz)
030 - 30mV/g	±250g	1,980kcpm (33kHz)
050 - 50mV/g	±160g	1,920kcpm (32kHz)
100 - 100mV/g	±80g	1,800kcpm (30kHz)
250 - 250mV/g	±32g	1,680kcpm (28kHz)
500 - 500mV/g	±16g	1,560kcpm (26kHz)

Cable/Connector
01 - PUR
02 - Braided
07 - Silicon
08 - Flame Retardant
50 - 2 Pin MS
54 - M12

Mounting Threads
02 - ¼-28" UNF Male
06 - M6 x 1mm Male
08 - M8 x 1.25mm Male

Hansford Sensors
Excellence in Vibration Monitoring

www.hansfordsensors.com
sales@hansfordsensors.com

We reserve the right to alter the specification of this product without prior notice

TS279U.8