HS-422S Accelerometer

4-20mA acceleration output via Braided Cable

Key Features

- 4-20mA acceleration output
- For use with PLC/DCS systems
- Side entry for easy access

Industries

Building services, Pulp and Paper, Mining, Metals, Utilities, Automotive, Water, Pharmaceutical

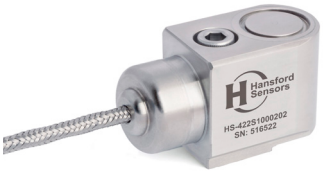

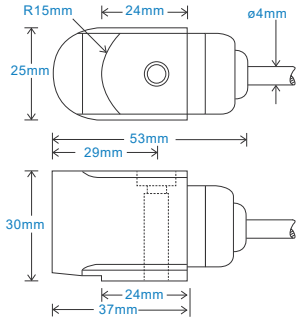

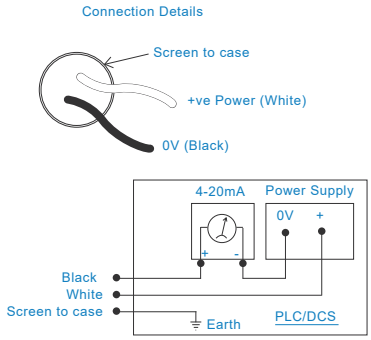

Technical Performance

Mounted Base Resonance	10kHz min
Acceleration Ranges	see: 'How To Order' table ±10%
	Nominal 80Hz at 22°C
Frequency Response	10Hz (600cpm) to 5kHz (300kcpm) ± 5%
	- ISO10816
Isolation	Base isolated
Range	see: 'How To Order' table
Transverse Sensitivity	Less than 5%

Mechanical

Case Material	Stainless Steel
Sensing Element/Construction	PZT/Shear
Mounting Torque	8Nm
Mounting Bolt Provided	see: 'How To Order' table x 30mm long
Weight	185gms (nominal) body only
Maximum Cable Length	1000 metres
Standard Cable Length	5 metres
Screened Cable	Braided - length to be specified with order
Mounting Threads	see: 'How To Order' table

Electrical

Current Output	4-20mA DC proportional to acceleration
Supply Voltage	15-30 Volts DC (for 4-20mA)
Settling Time	1 second
Output Impedance	Loop Resistance 600 Ohms max. at 24 Volts
Case Isolation	$>10^8$ Ohms at 500 Volts

Environmental

Operating Temperature Range	-25 to 120ºC
Sealing	IP65
Maximum Shock	5000g
EMC	EN61326-1:2013

Typical Frequency Response

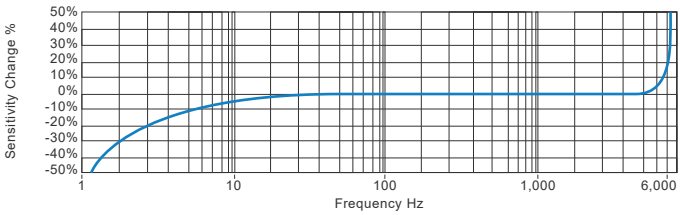

Applications

Fans, Motors, Pumps, Compressors, Centrifuges, Conveyors, Air Handlers, Gearboxes, Rolls, Dryers, Presses, Cooling, VAC, Spindles, Machine Tooling, Process Equipment

Vibration sensor should be firmly fixed to a flat surface (spot face surface may be needed to be produced and cable anchored to sensor body.)

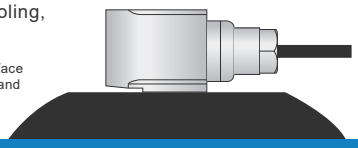

How To Order

Product Prefix
HS - Hansford Sensors

Product Series
422 - Industrial Vibration Sensor

Cable Length (if integral cable)
QXX - length specified in metres

H	S	4	2	2	S	X	X	X	X	X	X	X	X	X	X

Extra Options (if required)
F - Filtered
L - 316L Stainless Steel
RT - Temperature Output PT100
S - 90° Side Exit
T - Temperature Output
P - Peak Range
PP - Peak to Peak Range

Acceleration Range (RMS unless specified)
001 - 0-1g
002 - 0-2g
005 - 0-5g
010 - 0-10g
100 - 0-100g

Cable/Connector
01 - PUR
02 - Braided
07 - Silicon
08 - Flame Retardant
50 - 2 Pin MS
54 - M12

Mounting Threads
02 - ¼-28" UNF Male
06 - M6 x 1mm Male
08 - M8 x 1.25mm Male

Hansford Sensors
Excellence in Vibration Monitoring

www.hansfordsensors.com
sales@hansfordsensors.com

We reserve the right to alter the specification of this product without prior notice

TS329.10